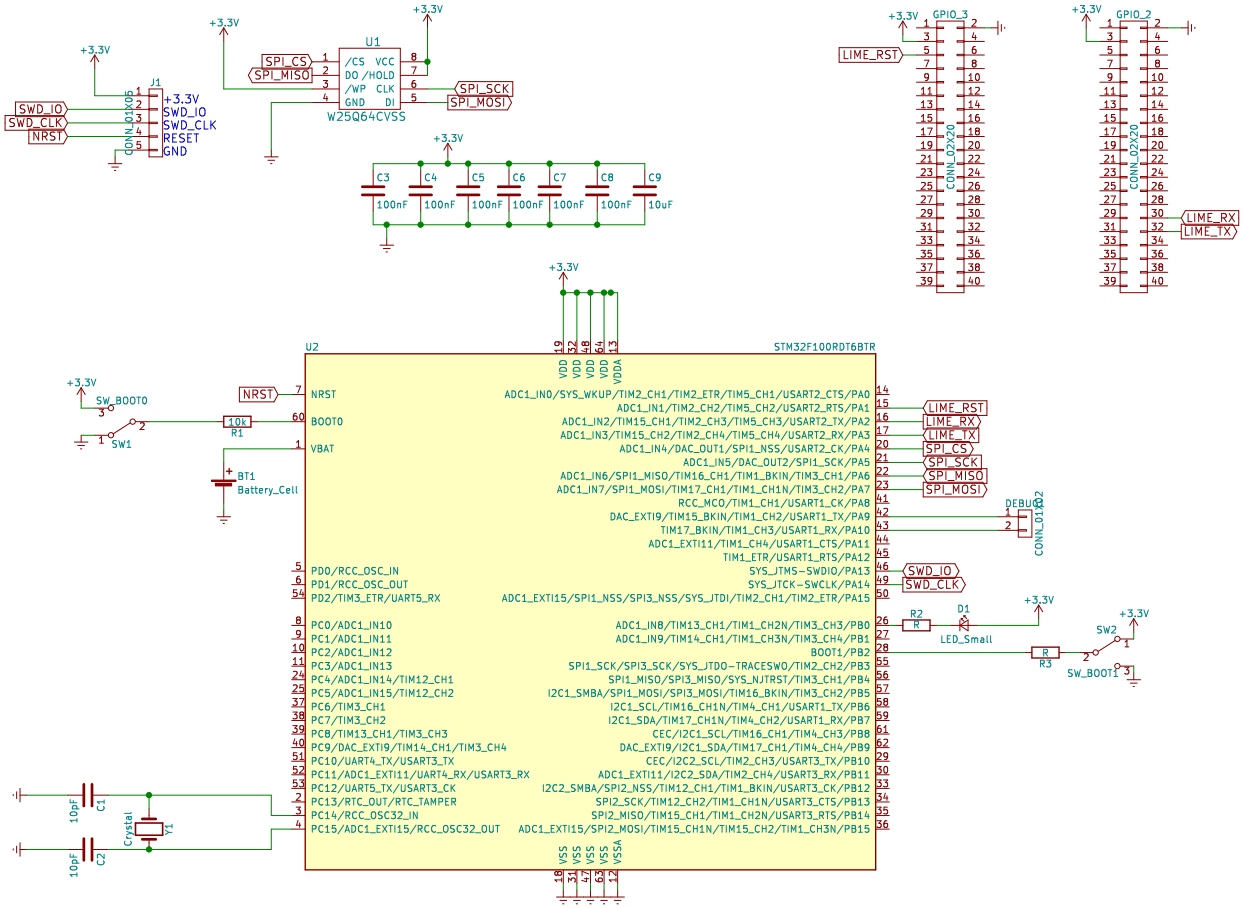

Whitebox Systems

Sheet: /

File: tbm64.sch

Title: Trusted Boot Module

Size: A3	Date: 2017-05-23	**Rev: 1**
KiCad E.D.A. eeschema 4.0.6		Id: 1/1